INSTALLATION INSTRUCTIONS

Product	Revision	Form
7160-1801, 7160-1807 ZEBRA ET40/45/401 DOCKING STATION	Rev. H	INST-1116 **Printing Spec:** PS-001

This instruction sheet is for the Zebra ET40/45/401 8" and 10" docking stations only. For instructions on features, set-up, and operation of the computer, please refer to the manual provided by Zebra with the computer.

This docking station is designed to be used with a variety of Gamber-Johnson mounting systems. Installation instructions for other Gamber-Johnson products are provided with each individual product.

This instruction sheet is for the following products:

Item No. 7160-1801-00 8", Bare Wire
Item No. 7160-1801-02 8", Cigarette Adapter
Item No. 7160-1801-04 8", 2.5mm Jack
Item No. 7160-1801-10 8", Charging Cradle (USB-C)
Item No. 7160-1801-14 8", Charging Cradle (2.5mm Jack)
Item No. 7160-1801-20 8", Full Port Replication
Item No. 7160-1801-90 8", Non-Powered Cradle
Item No. 7160-1807-00 10", Bare Wire
Item No. 7160-1807-02 10", Cigarette Adapter
Item No. 7160-1807-04 10", 2.5mm Jack
Item No. 7160-1807-10 10", Charging Cradle (USB-C)
Item No. 7160-1807-14 10", Charging Cradle (2.5mm Jack)
Item No. 7160-1807-20 10", Full Port Replication
Item No. 7160-1807-90 10", Non-Powered Cradle

Power Adapters are not needed in most applications as this docking station can handle 12-40Vdc input. Isolated and AC Power Adapters can be ordered for the 2.5mm power jack dock from Gamber-Johnson seperately.

-20 Full Port Replication Docks require a power adapter and 12VDC power input.

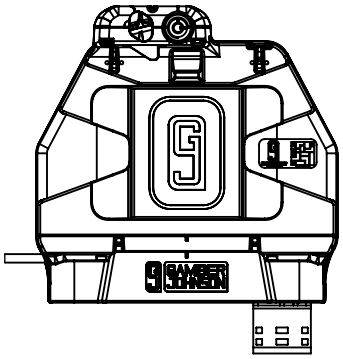

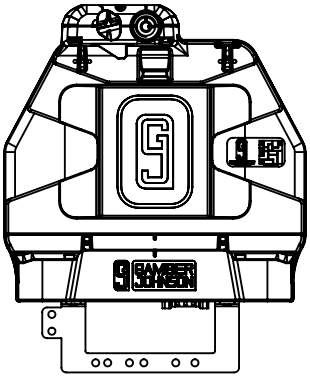

Product Mounting Disclaimer
Gamber-Johnson is not liable under any theory of contract or tort law for any loss, damage, personal injury, special, incidental or consequential damages for personal injury or other damage of any nature arising directly or indirectly as a result of the improper installation or use of its products in vehicle or any other application. In order to safely install and use Gamber-Johnson products full consideration of vehicle occupants, vehicle systems (i.e., the location of fuel lines, brakes lines, electrical, drive train or other systems), air-bags and other safety equipment is required. Gamber-Johnson specifically disclaims any responsibility for the improper use or installation of its products not consistent with the original vehicle manufactures specifications and recommendations, Gamber-Johnson product instruction sheets, or workmanship standards as endorsed through the Gamber-Johnson Certified Installer Program.

© Copyright 2026 Gamber-Johnson, LLC

If you need assistance or have questions, call Gamber-Johnson at 1-800-456-6868

PRE-INSTALLATION RECOMMENDATIONS

Conduct a "Bench Test"

Gamber-Johnson strongly advises a "bench test" be conducted to verify all electronic and software issues are resolved prior to installation:

1. Make sure the computer is operational by itself.
2. Insert computer into the docking station and verify that the computer is operating in the dock.
3. Interconnect entire assembly and verify start-up of all components, including other equipment (printers, modems, scanners, etc.)

Gamber-Johnson recommends positioning of all mounts and equipment in the vehicle prior to the actual install to verify that mounting locations are safe and practical.

IMPORTANT SAFETY INFORMATION FOR INSTALLERS

Safety is dependent on the proper installation and servicing of this docking station. It is important to read and follow all instructions before installing this product.

To properly install a Gamber-Johnson docking station you must have a good understanding of automotive electrical procedures and systems, along with proficiency in the installation and service of aftermarket vehicle equipment.

There are no adjustments required at any time of the electrical components within the docking station. **Opening the docking station will void the product warranty.**

During Installation:

DO NOT connect this docking station to the vehicle battery until:

1. All other electrical connections are made
2. Mounting of all components is complete
3. Verification that no shorts exist in the entire system

DO NOT install equipment or route wires or cords in the deployment path of any air bag.

When drilling into the vehicle, DO make sure that both sides of the surface are clear of anything that could be damaged.

CAUTION: *If wiring is shorted to the frame, high current conductors can cause hazardous sparks resulting in electrical fires or flying molten metal.*

After installation:

Test the docking station to ensure that it is working properly.

File these instructions in a safe place and refer to them when performing maintenance or re-installing.

WARNING*: Failure to follow all safety precautions and instructions may result in property damage, serious injury, or death.*

FEATURE IDENTIFICATION

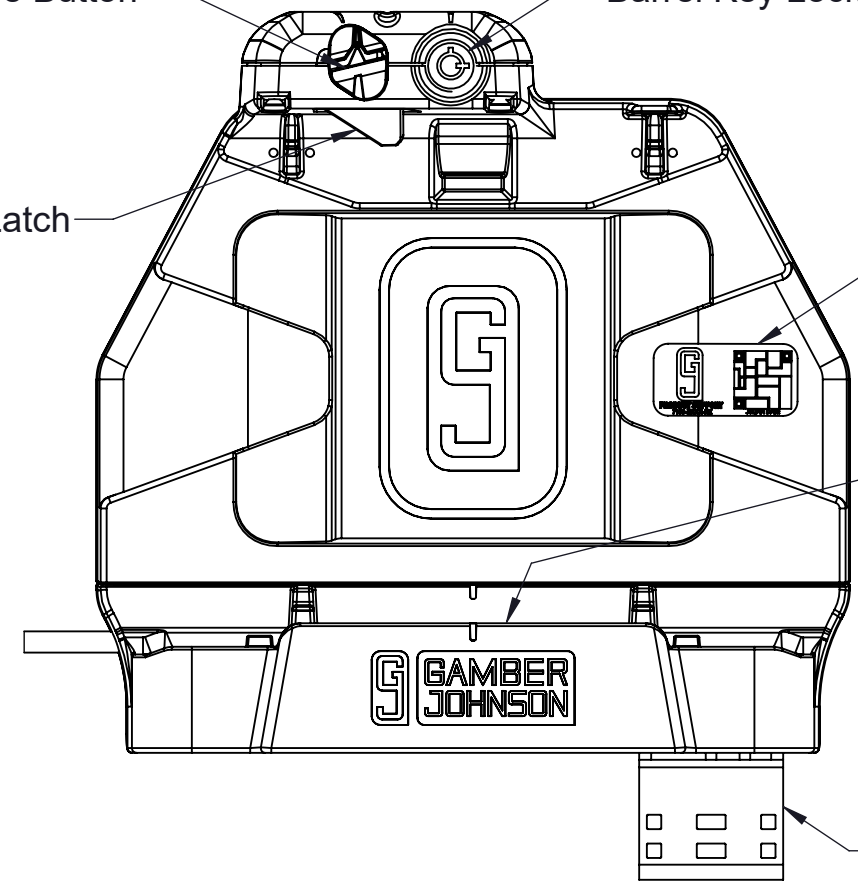

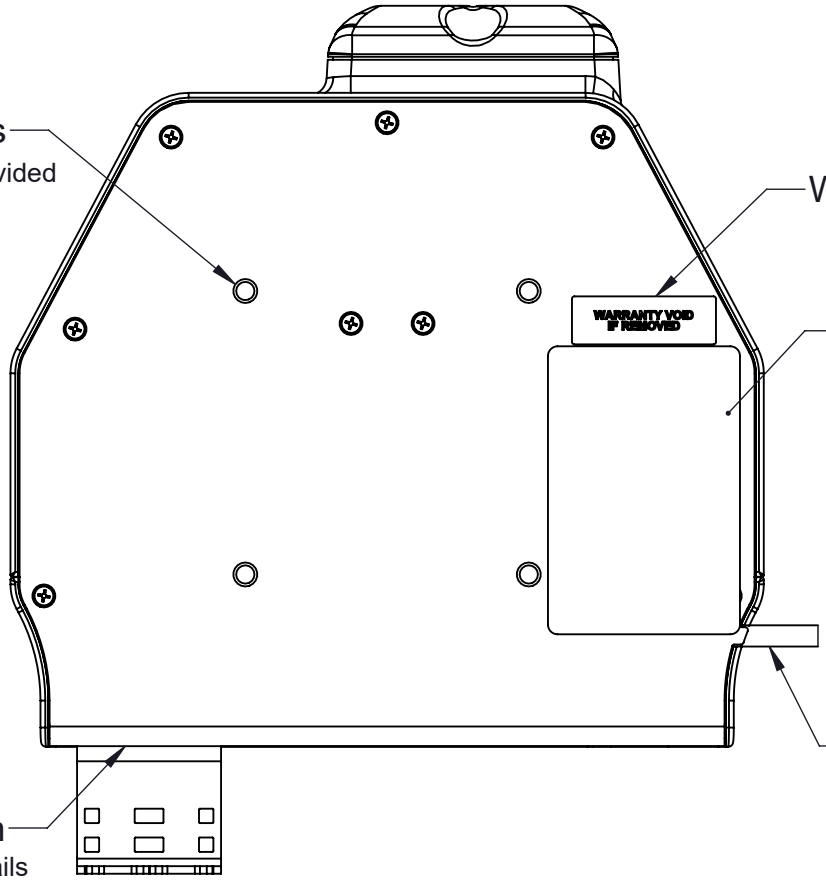

PORT IDENTIFICATION (-00, -02, -04)

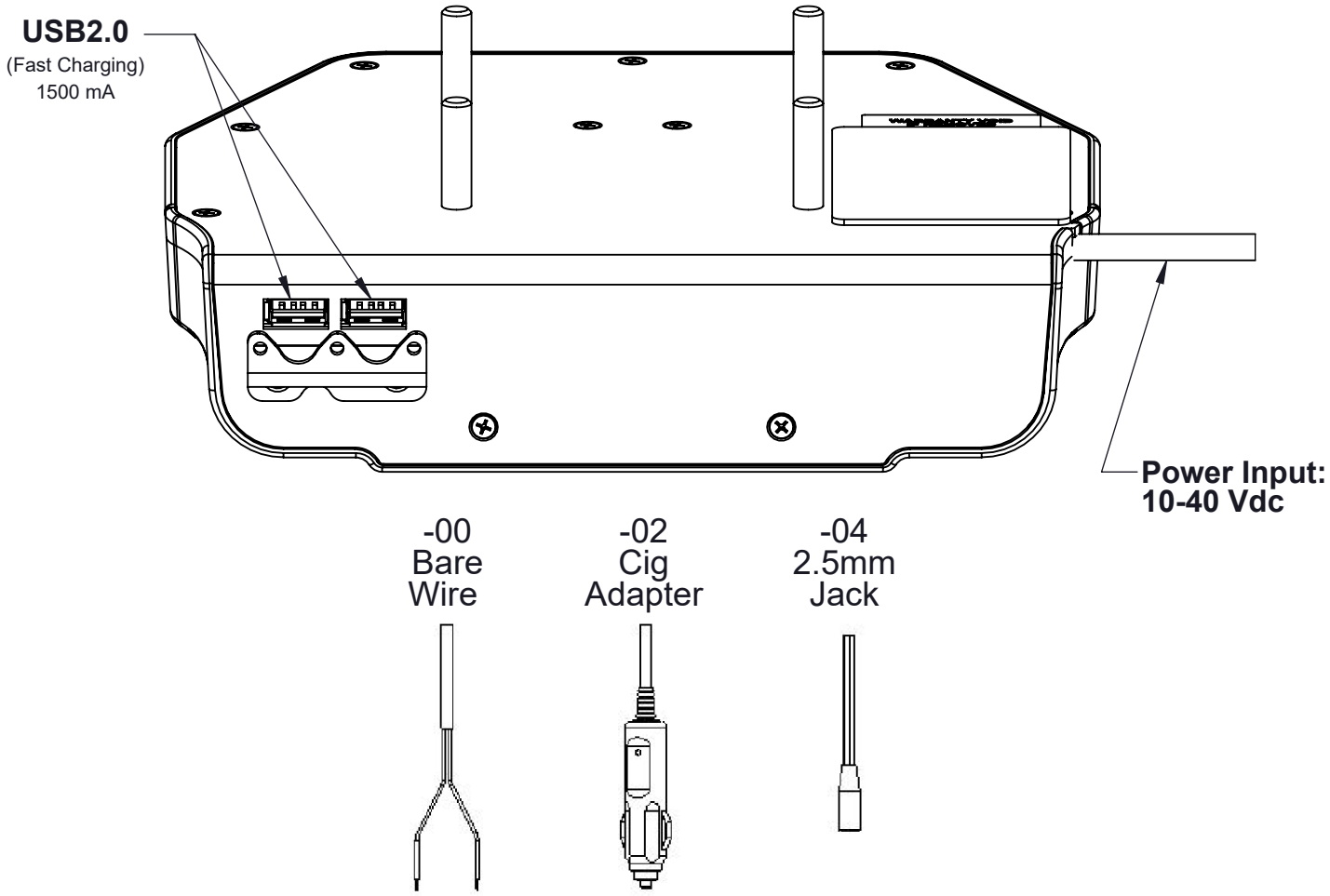

CABLE MANAGMENT FEATURES AND PROPER INSTALLATION (-00, -02, -04)

1.) Use Zip ties (provided) to secure each port cable to the specific strain relief feature on the dock
2.) Use Zip ties (provided) to secure bundled cables for improved routing - OPTIONAL

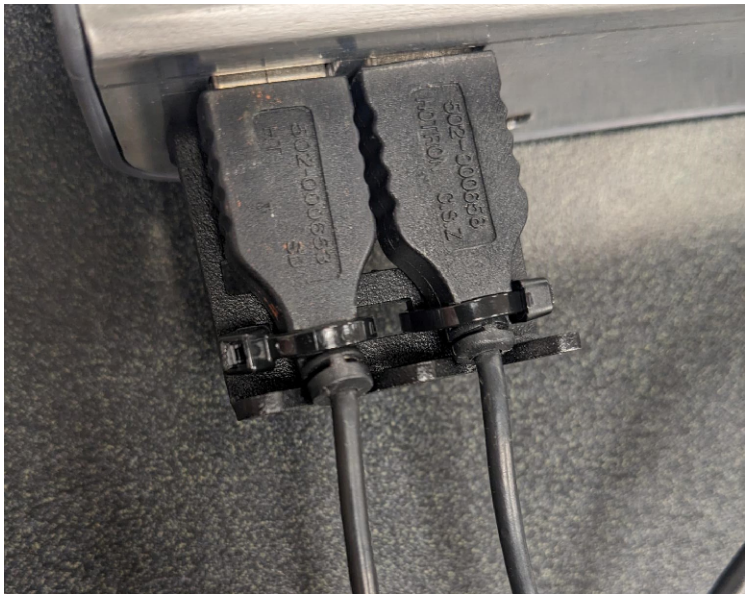

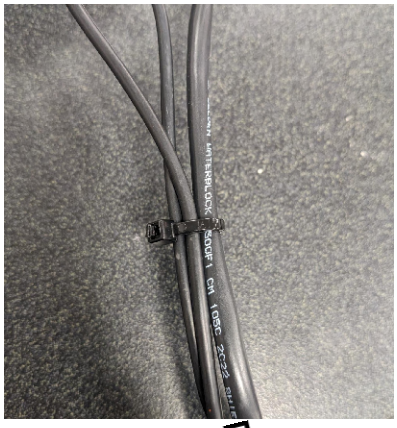

Cables route past mounting equipment

PORT IDENTIFICATION (-10 & -14)

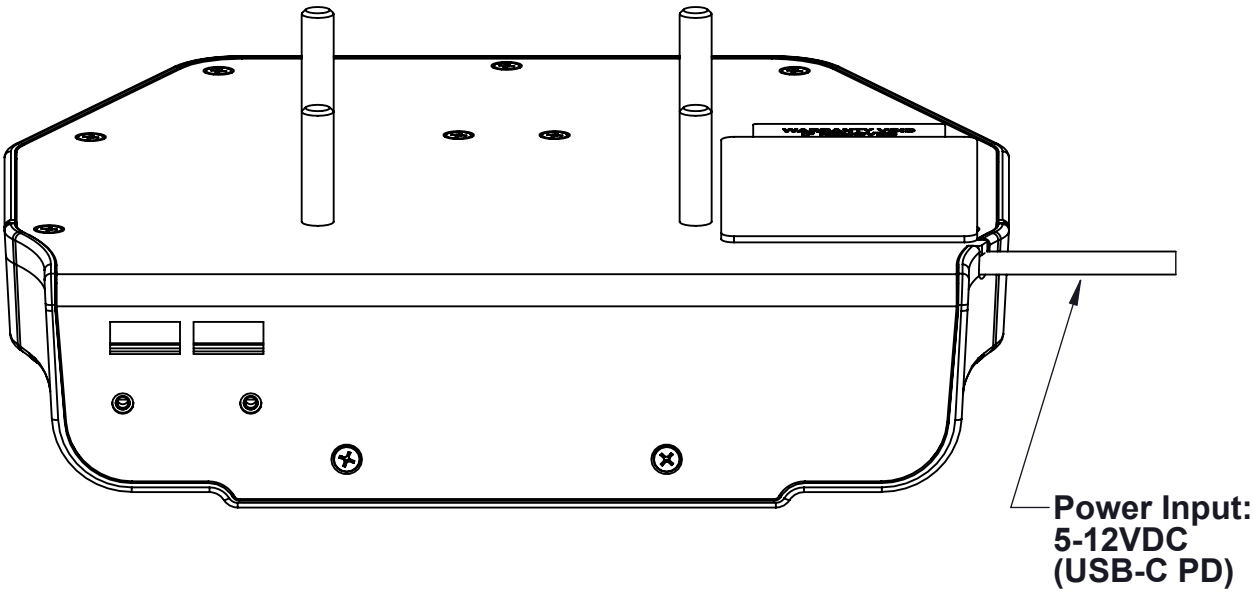

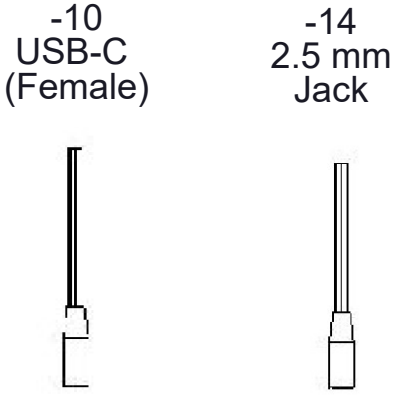

PORT IDENTIFICATION (-20)

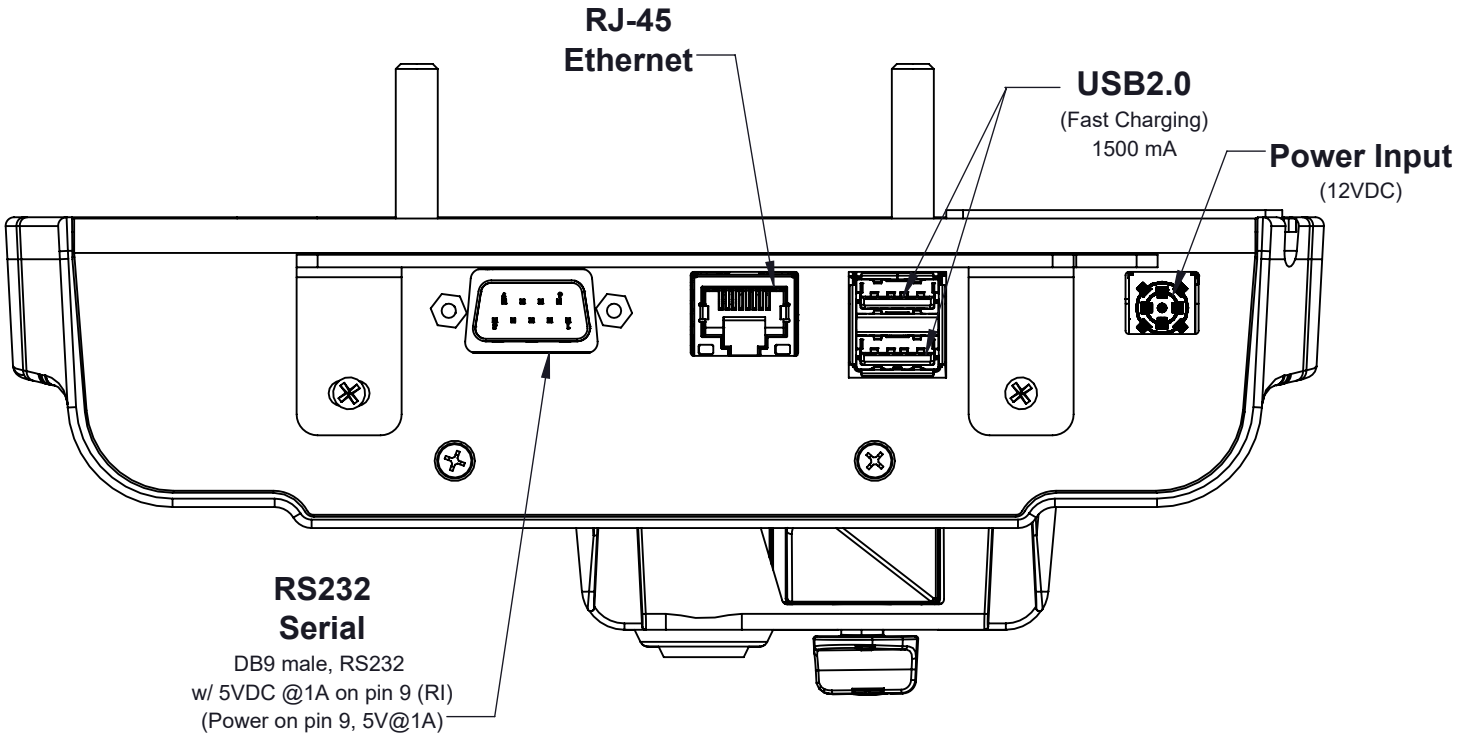

CABLE MANAGMENT FEATURES AND PROPER INSTALLATION (-20)

1.) Use Zip ties (provided) to secure each port cable to the specific strain relief feature on the dock
2.) Use Zip ties (provided) to secure bundled cables for improved routing - OPTIONAL

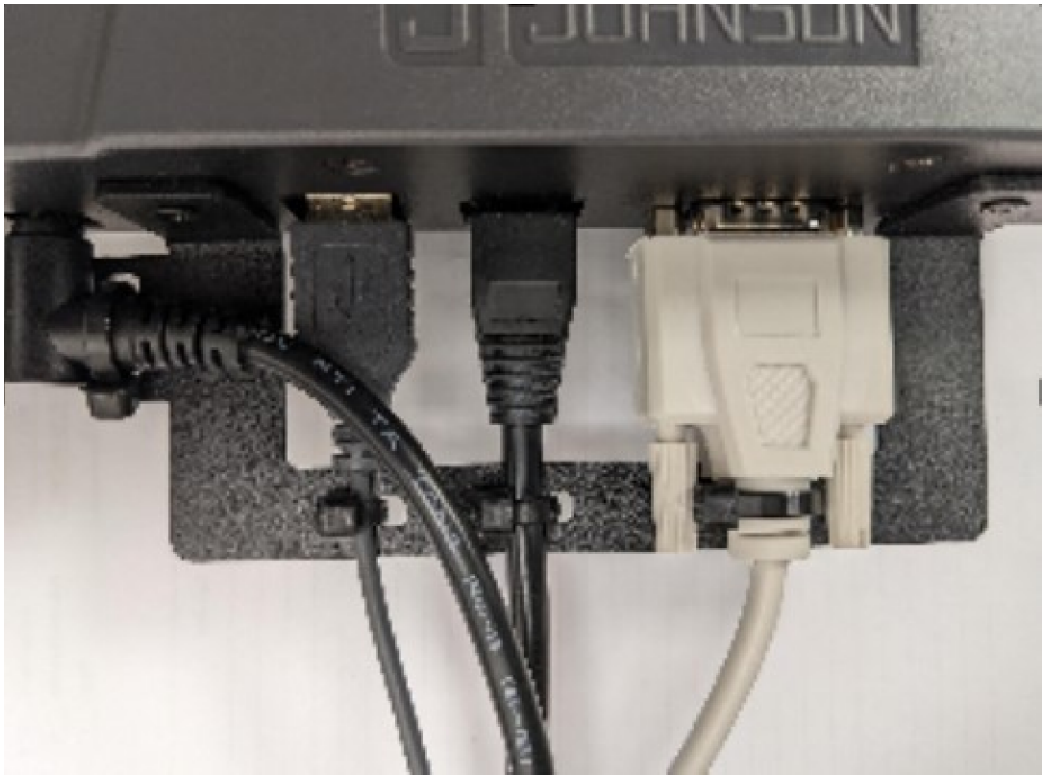

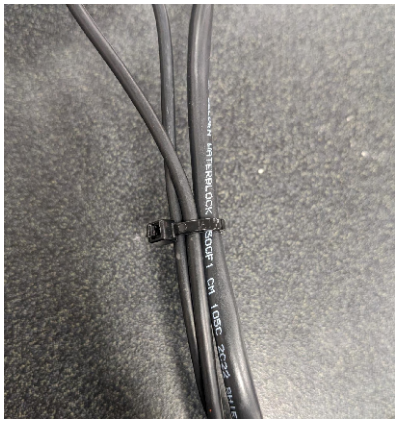

Cables route past mounting equipment

DOCKING AND UNDOCKING THE COMPUTER

OPERATION - DOCKING

1. Insert the bottom of the tablet into the bottom of the dock. Features on the dock align with cavities in the tablet and rugged boot to guide the computer into position.

2. Rotate the top of the tablet into the dock, overcoming the resistance until the Release Button returns to the "Latched" position. The slam latch will come over the front of the tablet. There will also be an audible confirmation as the latch system springs downward.

3. Optional - With the dock in the "Latched" position, turn the lock to the "LOCKED" position (CW).

Insert Bottom First

Rotate Top

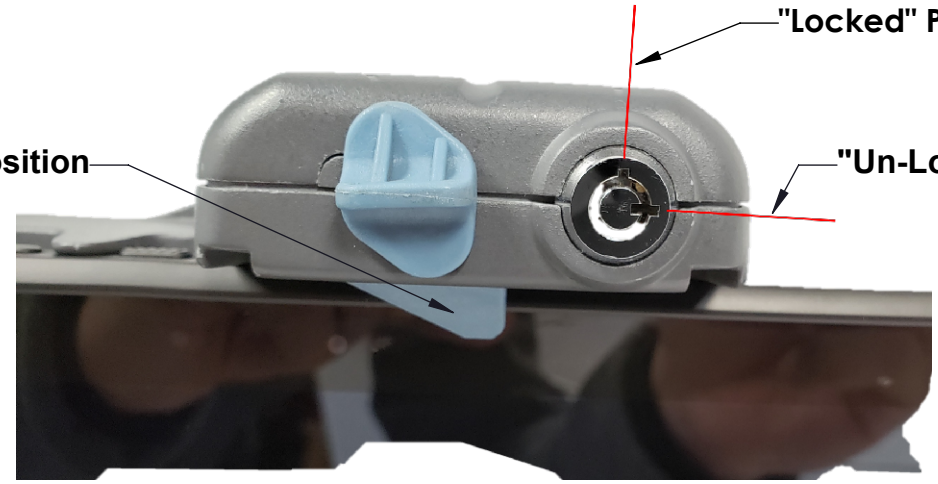

OPERATION - UNDOCKING

1. Turn the lock to the "UNLOCKED" position (CCW).

2. With your hand on the top of the tablet, push up on the blue Release Button until the tablet is free to move forward. While the dock is "Un-Latched", pull the top of the tablet forward until it clears the dock. This can be done right or left handed.

3. Remove the tablet by pulling it away from the dock.

Push Up

Pull Away

Regulatory Certification Information (PART 1/3)

Regulatory Model #: 7160-1801 & 7160-1807

GJ Model #'s & Description:

7160-1801-00	Dock - Zebra ET4X 8" - Bare Wire
7160-1801-02	Dock - Zebra ET4X 8" - Cigarette Adapter
7160-1801-04	Dock - Zebra ET4X 8" - 2.5mm Jack
7160-1807-00	Dock - Zebra ET4X 10" - Bare Wire
7160-1807-02	Dock - Zebra ET4X 10" - Cigarette Adapter
7160-1807-04	Dock - Zebra ET4X 10" - 2.5mm Jack

Certifications:

- EN 55032: 2015+A11:2020 (Class A)
- EN 55035: 2017
- EN 62368-1
- IEC 62368-1
- UL 62368-1
- EN 50498:2010
- Immunity
- ISO 10605, Section 8, Table C.2, Cat.2
- VCCI (Japan)
- VCCI-CISPR 32:2016
- RCM (Australia/New Zealand)
- AS/NZS CISPR 32:2015
- ICES (Canada)
- ISED ICES-003 Issue 7:2020

This device complies with Part 15 of the FCC Rules. Operation is subject to the following two conditions. (1) this device may not cause harmful interference, and (2) this device must accept any interference received, including interference that may cause undesired operation.

CAN ICES-003(A)/NMB-003(A)

Gamber-Johnson LLC, 5001 Joerns Drive,
Stevens Point, WI, 54481, USA, 715-344-3482

Regulatory Certification Information (PART 2/3)

Regulatory Model #: 7160-1801 & 7160-1807

GJ Model #'s & Description:

7160-1801-20	Dock - Zebra ET4X 8" - Bare Wire
7160-1807-20	Dock - Zebra ET4X 10" - Bare Wire

Certifications:

- EN 55032: 2015+A11:2020 (Class B)
- EN 55035: 2017
- EN 62368-1
- IEC 62368-1
- UL 62368-1
- EN 50498:2010
- Immunity
- ISO 10605, Section 8, Table C.2, Cat.2
- VCCI (Japan)
- VCCI-CISPR 32:2016
- RCM (Australia/New Zealand)
- AS/NZS CISPR 32:2015
- ICES (Canada)
- ISED ICES-003 Issue 7:2020

This device complies with Part 15 of the FCC Rules. Operation is subject to the following two conditions. (1) this device may not cause harmful interference, and (2) this device must accept any interference received, including interference that may cause undesired operation.

CAN ICES-003(B)/NMB-003(B)

Gamber-Johnson LLC, 5001 Joerns Drive,
Stevens Point, WI, 54481, USA, 715-344-3482

Regulatory Certification Information (PART 3/3)

Regulatory Model #: 7160-1801 & 7160-1807

GJ Model #'s & Description:

7160-1801-10	Cradle - Zebra ET4X 8" (Charging Only)
7160-1807-10	Cradle - Zebra ET4X 10" 2.5mm Jack (Charging Only)
7160-1801-14	Cradle - Zebra ET4X 8" 2.5mm Jack(Charging Only)
7160-1807-14	Cradle - Zebra ET4X 10" (Charging Only)
7160-1801-90	Cradle - Zebra ET4X 8" (no electronics)
7160-1807-90	Cradle - Zebra ET4X 10" (no electronics)
7160-1807-91	Cradle - Zebra ET4X 10" (Non-Vehicle HC)

Gamber-Johnson LLC, 5001 Joerns Drive,
Stevens Point, WI, 54481, USA, 715-344-3482