PRODUCT GUIDE

Getac G140 Docking Station

PRODUCT NUMBER(S)

7160-2212 Series

For more language options and/or questions, please contact a Gamber-Johnson representative at **+1 800.756.9198**

RUGGED. RELIABLE. RESPONSIVE.
5001 Joerns Dr, Stevens Point, WI 54481 | +1 800.756.9198 | www.gamberjohnson.com | @gamberjohnson

Since 1954, we have been dedicated to providing **RUGGED**, **RELIABLE**, and **RESPONSIVE** solutions that empower professionals in the field.

Thank you for choosing Gamber-Johnson.

Welcome to your new **Gamber-Johnson Docking Station**—engineered for **mission-critical reliability** in the toughest environments. At Gamber-Johnson, we understand that your technology is more than a tool; it's a lifeline. That's why our rugged mounting solutions and docking stations are designed to integrate seamlessly with your equipment, ensuring **secure connections** and **reliable performance** wherever your job takes you.

This guide will walk you through the safe and effective installation of your **Docking Station.**

Inside, you'll find:

- Inventory list of what's included
- Step-by-step installation instructions
- Images for easy reference
- Essential safety information to ensure proper setup and operation

Our commitment to **quality**, **durability**, and **rugged reliability** is built into every product we make.

Important: Before you begin, please carefully review all safety instructions provided in this guide. For vehicle applications, we recommend professional installation by qualified technicians with experience in automotive electrical systems and aftermarket vehicle equipment installation.

For additional product information, installation tips, or support, please contact your Gamber-Johnson representative at **+1 800.756.9198** or visit **www.gamberjohnson.com**.

PAGE	SECTION
1	Cover Page
2	Introduction
3	Table Of Contents
4	Components Included
5	Notes
6	Feature Identification
7	Port Identification
8-9	Safety Information
10	Installation
11	Docking & Undocking
12	Product Care
13	Specifications
14	Regulatory
15	Warranty

COMPONENTS INCLUDED

QTY	P/N	DESCRIPTION
1	7160-2212-XX	Docking Station

QTY	P/N	DESCRIPTION
1	7120-0430	Hardware Bag ¼”-20 Nut and Washer

QTY	P/N	DESCRIPTION
1	N/A	Keys

This Product Guide is for the **Getac G140 Docking Station**.

Before you begin installation, please review all safety instructions to ensure proper setup. For instructions on computer features, setup, and operation, refer to your device's manual.

Failure to follow the instructions in this product guide may result in improper installation, use, or product care resulting in damage to the docking station or computer which will not be covered under warranty.

This docking station is designed to work seamlessly with Gamber-Johnson's extensive line of rugged mounting systems. Visit **www.gamberjohnson.com/products** to explore our full range of solutions and accessories. Installation instructions for additional Gamber-Johnson products are included with each individual product.

Important: Before installation, ensure you have the recommended power adapters to power the docking station. These can be ordered separately from Gamber-Johnson. Please refer to the list of compatible power supplies included below.

PRODUCT SELECTION	
MODEL NUMBER	**DESCRIPTION**
7300-0413	Lind Power Supply – Isolated, 12-32 Vdc Input, Bare Wire
7300-0412	Lind Power Supply – Isolated, 20-60 Vdc Input, Bare Wire
7300-0416	Lind Power Supply – Isolated, 72-110 Vdc Input, Bare Wire
7300-0471	Getac Power Supply – Auto,12-32 Vdc Input, 19 Vdc 120-Watt Output, Cig Adapter
7300-0516	Getac Power Supply – Auto, 12-32 Vdc Input, 19 Vdc 120-Watt Output, Bare Wire

For additional product information, installation tips, or support, please contact your Gamber-Johnson representative at **+1 800.756.9198**.

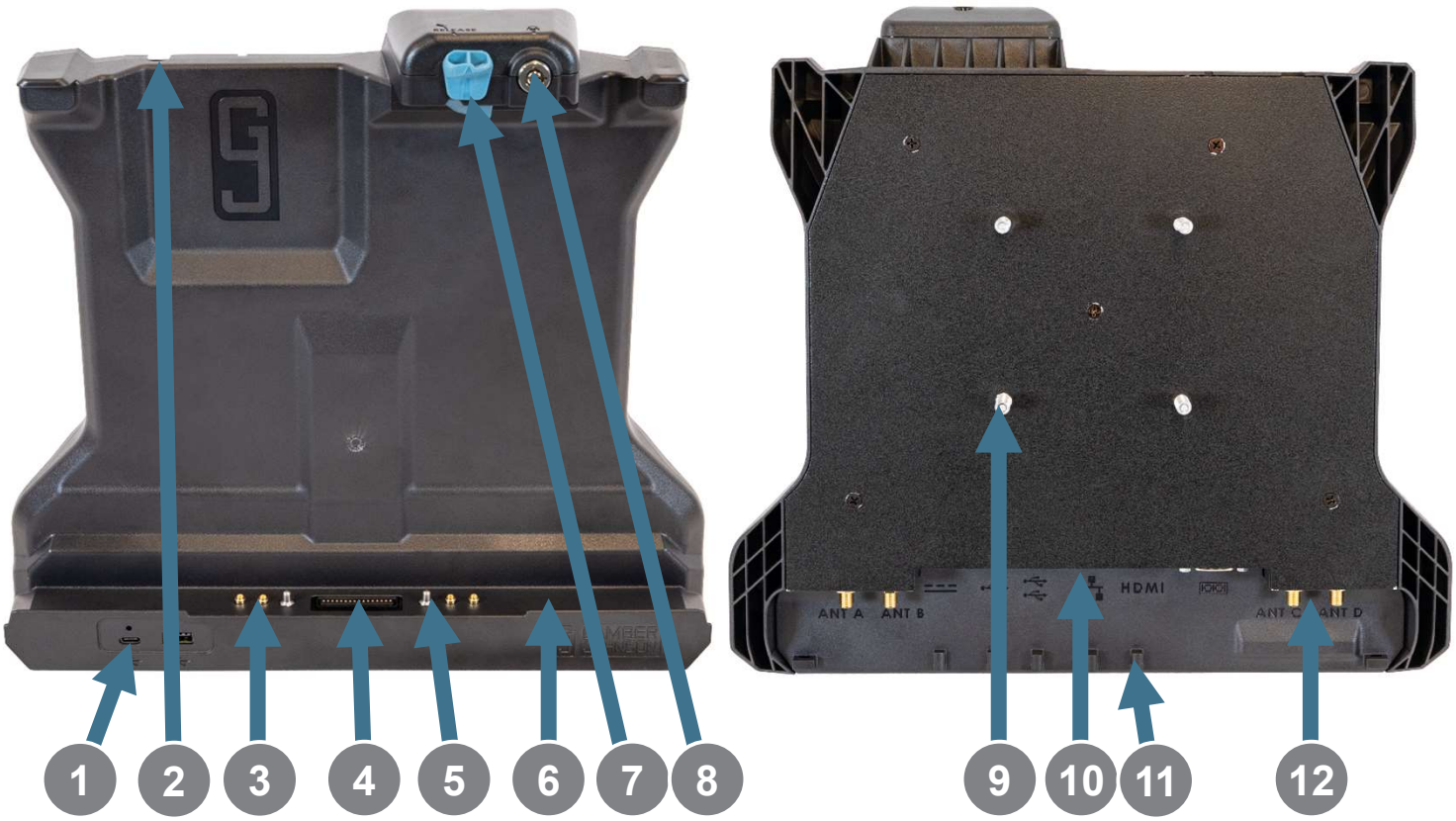

	DESCRIPTION
1	Front USB Ports
2	Stylus Holder
3	Quad Pass-through Antenna's (Optional, -04 and -14 Sku's only))
4	Floating Docking Connector
5	Guide Pins
6	Locating Guides
7	Thumb Latch
8	Keyed Lock
9	¼"-20 Mounting Studs- 75mm VESA Pattern
10	Port Identification
11	Integrated Cable Restraints
12	Quad Pass-through Antenna SMA Connections(Optional, -04 and -14 Sku's only))

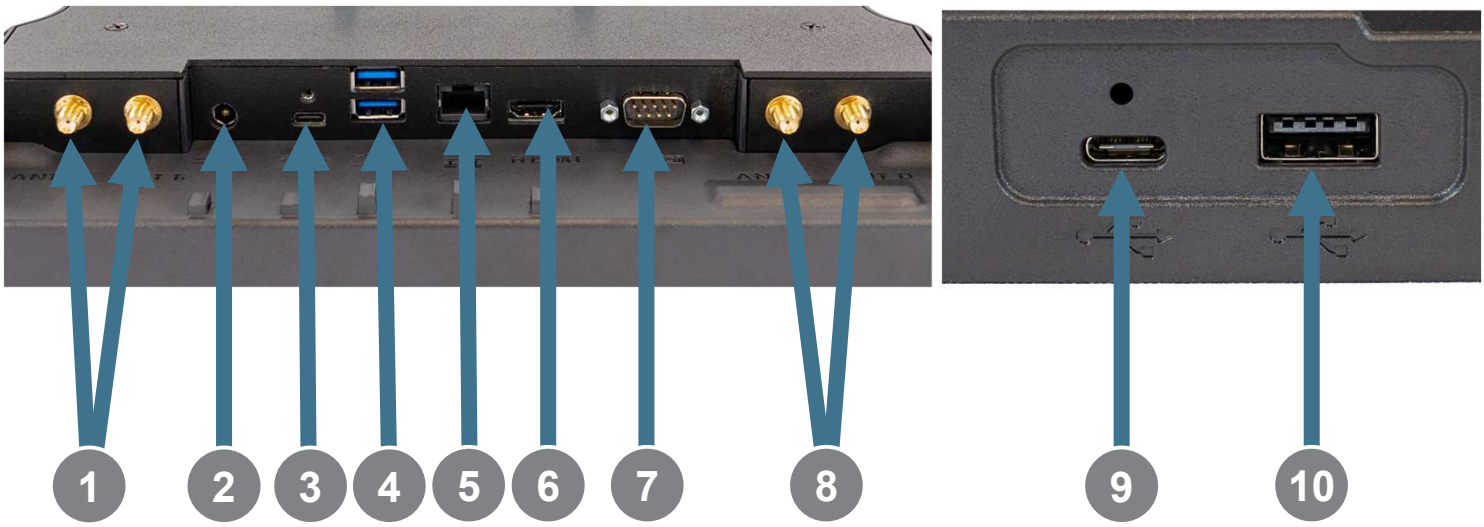

	DESCRIPTION
1	Pass-through SMA RF; Default Configuration: Ant A-WWAN MIMO, ANT B-WWAN Main (Optional, -04 and -14 Sku's only)
2	DC Power In – 19 Vdc
3	USB-C 3.2
4	(2) USB-A 3.2
5	RJ45 Ethernet
6	HDMI (Optional, -00 and -04 Sku's only)
7	RS232 Serial (5V Powered On Pin 9)
8	Pass-through SMA RF; Default Configuration: ANT C-WLAN or WWAN Aux, ANT D-GPS (Optional, -04 and -14 Sku's only)
9	USB-C 2.0 (Front)
10	USB-A 2.0 (Front)

Safety is dependent on the proper installation and servicing of this docking station. It is important to read and follow all instructions before installing this product.

To properly install a Gamber-Johnson docking station you must have a good understanding of automotive electrical procedures and systems, along with proficiency in the installation and service of aftermarket vehicle equipment.

There are no adjustments required at any time of the electrical components within the docking station. **Opening the docking station will void the product warranty.**

During Installation:

- Proper cable management is an essential part of the installation process. **Failure to follow the instructions in the Installation section may cause damage to the docking station which will not be covered under warranty.**
- Do not connect this docking station to the vehicle battery until:
  - All other electrical connections are made
  - Mounting of all components is complete
  - Verification that no shorts exist in the entire system

After Installation:

- Test the docking station to ensure that it is working properly.

General Safety Notes:

- Do not install equipment or route wires or cords in the deployment path of any air bag.
- When drilling into the vehicle, DO make sure that both sides of the surface are clear of anything that could be damaged.

⚠ CAUTION

If wiring is shorted to the frame, high current conductors can cause hazardous sparks resulting in electrical fires or flying molten metal.

⚠ WARNING

Failure to follow all safety precautions and instructions may result in property damage, serious injury, or death.

File these instructions in a safe place and refer to them when performing maintenance or reinstalling.

Conduct a "Bench Test”

Gamber-Johnson strongly advises a "bench test" be conducted to verify all electronic and software issues are resolved prior to installation:

Before Installation:

- Make sure the computer is operational by itself.
- Insert computer into the docking station and verify that the computer is operating in the dock.
- Interconnect entire assembly and verify start-up of all components, including other equipment (printers, modems, scanners, etc.)

Gamber-Johnson recommends positioning of all mounts and equipment in the vehicle prior to the actual install to verify that mounting locations are safe and practical.

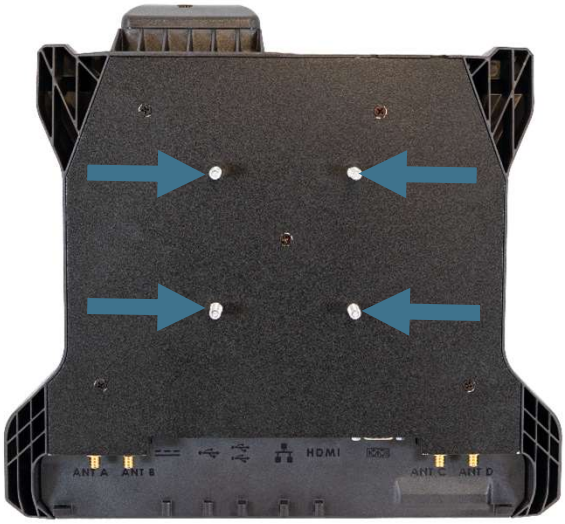

Figure 1

Mounting:

1. A mount with a VESA 75mm pattern is required to mount the docking station using the ¼”-20 mounting studs on the rear of the docking station. (Figure 1)
2. Attach the docking station to the selected mount using the ¼-20” hardware from the 7120-0430 Hardware Bag.

Figure 2

Cable Management:

1. Use cable ties provided in hardware bag 7120-0542 to secure each port cable to the specific strain relief feature on the docking station. (Figure 2)
2. Use cable ties to secure bundled cables exiting the docking station for improved routing. The bundled cables should be routed to the side that will create no strain or stress to the cables or connections.
3. Provide a relief loop in the bundled cables between the docking station and the stationary mount to allow full travel of any motion attachment used to mount the docking station.

Operation: Docking

1. Insert the bottom of the tablet into the docking station. (Figure 1)
2. Rotate the top of the tablet under the top latch until the tablet is resting inside the main housing. The latch will spring down in front of the tablet to hold it in place. (Figure 2)
3. (Optional) Turn the lock 90 degrees CCW to lock the tablet in the docking station. (Figure 3)

Figure 1

Figure 2

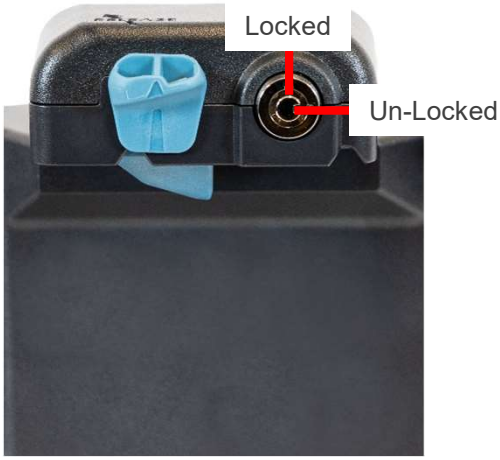

Figure 3

Operation: Un-Docking

1. Unlock the docking station if previously locked. Turn the lock 90 degrees CW.
2. Push upward on the thumb latch and pull outward on the top of the tablet until it clears the latch. (Figures 4 and 5)
3. Lift the tablet up and out of the docking station. (Figure 6)

Figure 4

Figure 5

Figure 6

Recommended Supplies:

Compressed Air (Canned or Low-Pressure Compressor)
Electronics Cleaner
ESD Swabs
Anti-static Soft Bristle Brush
70% Isopropyl Alcohol Solution
Soft Cleaning Cloth

1. In order to prevent electronic shorts, always disconnect power and devices from the docking station before cleaning.
2. Use compressed air to blow any excess dust from connector area. Use an anti-static brush to gently brush away dirt from connector area.
3. If the docking station has caked on dirt/dust, use Electronics Cleaner and an ESD Swab to gently clean connector. **Always disconnect power and devices from docking station when using electronics cleaner to prevent shorts.**
4. The body of the docking station may be cleaned with a soft cleaning cloth dampened slightly with Isopropyl Alcohol solution. Use caution to not contact the electrical connector or any other electronic connections. Do not use other chemicals or abrasives.
5. Let the docking station dry completely before reconnecting power and devices.

WEIGHT
2.7 lbs

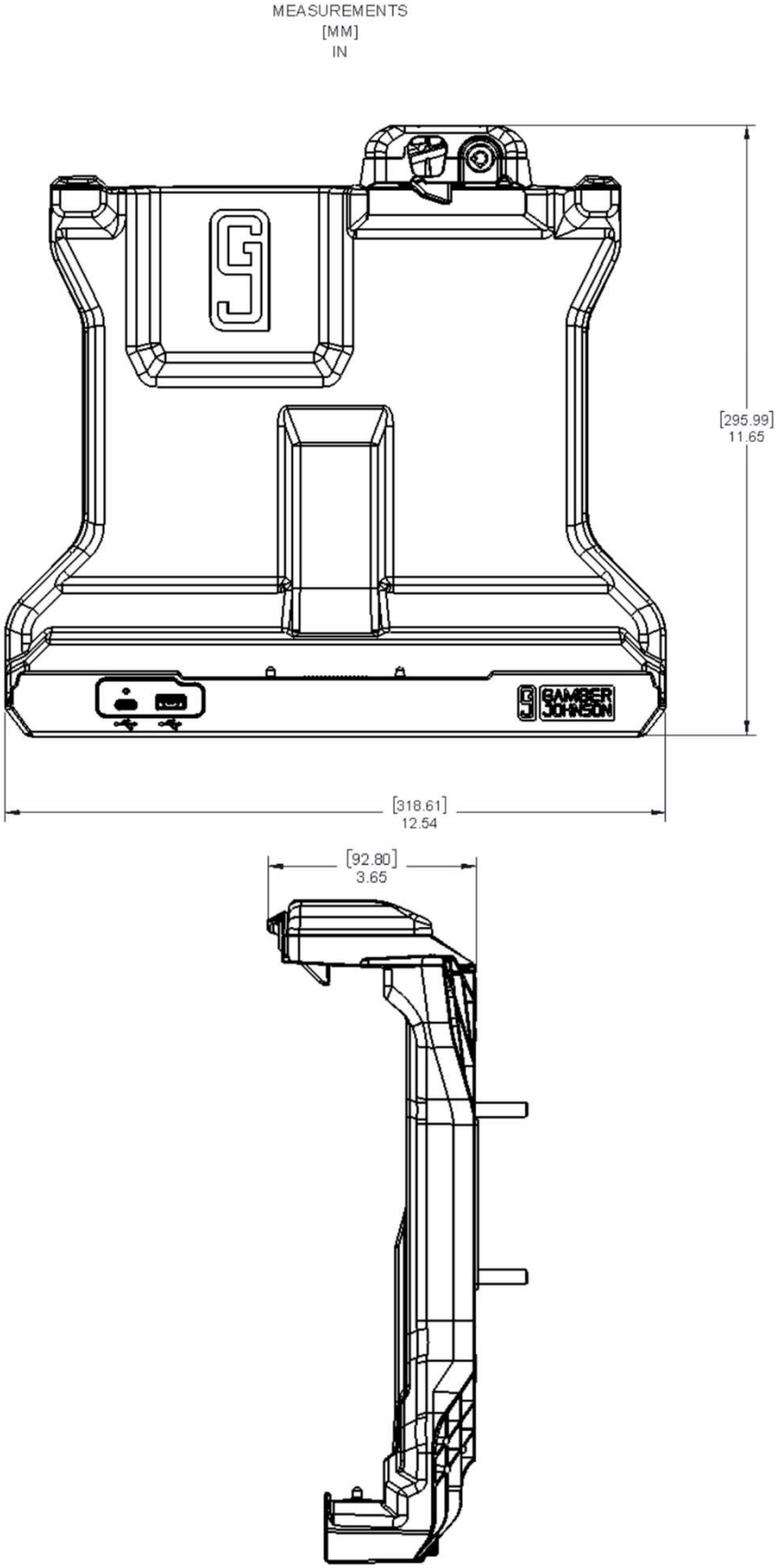

REGULATORY MODEL #: 7160-2212

GAMBER JOHNSON MODEL #'s & DESCRIPTION:

7160-2212-00 Docking Station – Getac G140 - No RF
7160-2212-04 Docking Station – Getac G140 - Quad RF
7160-2212-10 Docking Station – Getac G140 - Lite - No RF
7160-2212-14 Docking Station – Getac G140 - Lite - Quad RF

CERTIFICATIONS

EN 50498:2010
EN 55032:2015/A11:2020
AS/NZS CISPR 32:2015
FCC 47 CFR Part 15 Subpart B
ICES-003, Issue 7:2020 Class B

RoHS COMPLIANT

E57 10R-07-2850

This device complies with Part 15 of the FCC Rules. Operation is subject to the following two conditions. (1) this device may not cause harmful interference, and (2) this device must accept any interference received, including interference that may cause undesired operation.

SCAN HERE TO VIEW WARRANTY INFORMTION

www.gamberjohnson.com/product-services/warranty-information

Product Mounting Disclaimer

Gamber-Johnson is not liable under any theory of contract or tort law for any loss, damage, personal injury, special, incidental or consequential damages for personal injury or other damage of any nature arising directly or indirectly as a result of the improper installation or use of its products in vehicle or any other application. In order to safely install and use Gamber-Johnson products full consideration of vehicle occupants, vehicle systems (i.e., the location of fuel lines, brake lines, electrical, drive train or other systems), air-bags and other safety equipment is required. Gamber-Johnson specifically disclaims any responsibility for the improper use or installation of its products not consistent with original vehicle manufactures specifications and recommendations, Gamber-Johnson product instruction sheets, or workmanship standards as endorsed through the Gamber-Johnson Certified Installer Program.

© Copyright 2026 Gamber-Johnson, LLC

QUESTIONS OR NEED MORE INFORMATION? NO PROBLEM, WE'RE HERE TO HELP!

Call us at: **+1 800.756.9198**
Email us at: **sales@gamberjohnson.com**

Visit **www.gamberjohnson.com** to see our complete line of solutions and hang with us on social media at **@gamberjohnson**