INSTALLATION INSTRUCTIONS

Product	Revision	Form
Notepad™V - Universal Cradle & Accessories 7160-0250 Notepad™V Universal Cradle w/Standard Side Clips 7160-0250-01 Notepad™V Universal Cradle w/Tall Side Clips 7160-0250-02 Notepad™V Universal Cradle w/Zero Edge Side Clips 7160-0250-03 Notepad™V Universal Cradle w/Cam Assembly 7160-0251 Screen Support Assembly 7160-0252 LED Light Assembly 7160-0253 Mic Clip Assembly	Rev. J	INST-479
		Printing Spec: PS-001

Notepad™V & Notepad™V-LT Universal Computer Mounts 7160-0250 & 7160-0250-02, will accommodate computers 10.62" to 16.50" in width, 8.50" to 12.00" in depth and up to 1.50" thick. Notepad™V Universal Computer Mount w/Tall Side Clips 7160-0250-01, will accommodate computers up to 2.00" thick. **Note:** Recommended maximum device weight is 8 lbs.

The Notepad™V hold-down clips and key lock are designed to securely hold the laptop in the mount and deter theft, not prevent it. Gamber-Johnson recommends taking your laptop out of the vehicle when not in use.

9/64" Hex (Allen) wrench is needed to adjust clip location and position.
7/16" Wrench or Socket is need to attach Notepad™V to Gamber-Johnson Motion Attachments.
#2 Phillips screwdriver and a 9/64" Hex (Allen) wrench are need to mount accessories.

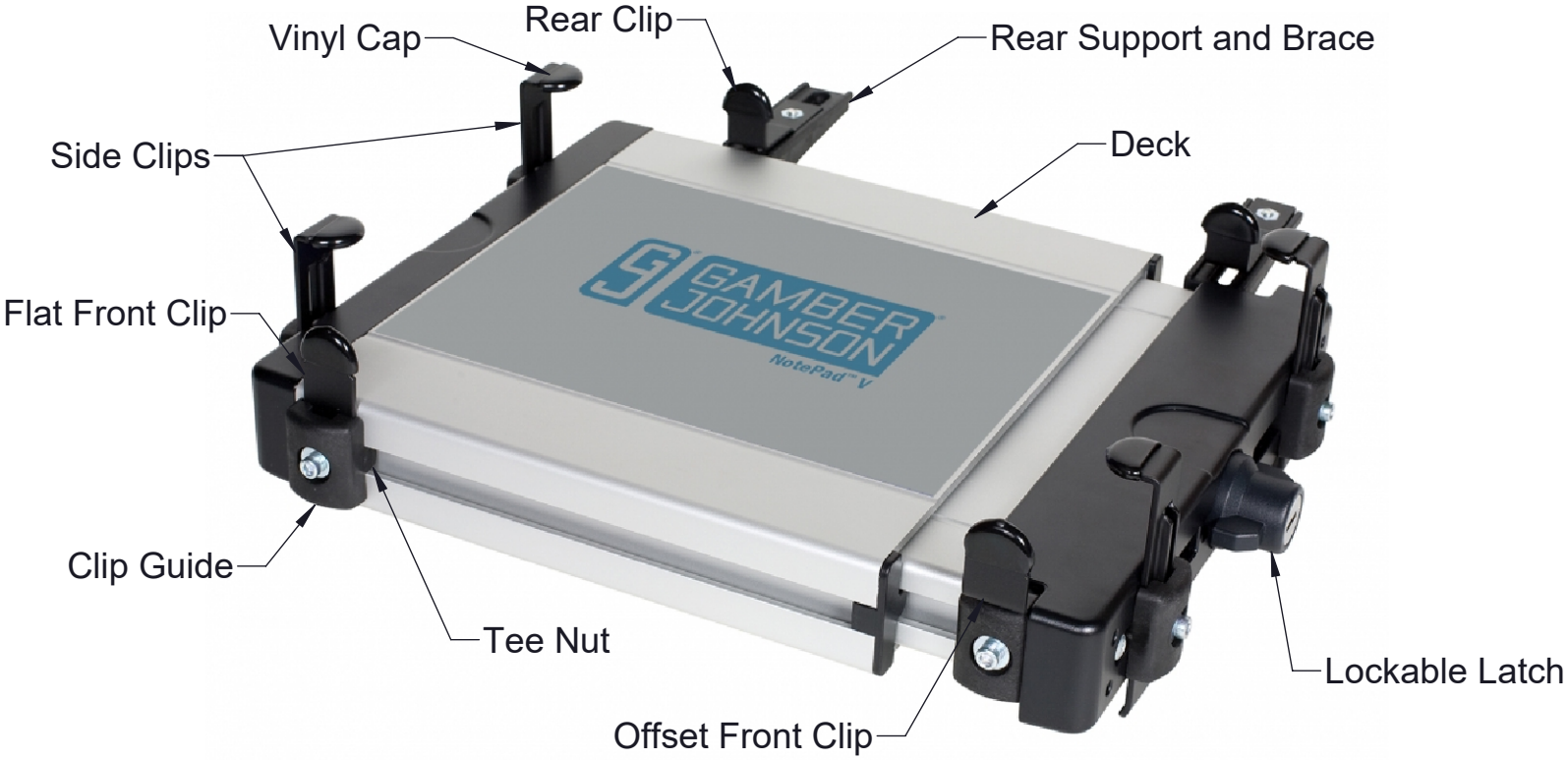

Product Mounting Disclaimer
Gamber-Johnson is not liable under any theory of contract or tort law for any loss, damage, personal injury, special, incidental or consequential damages for personal injury or other damage of any nature arising directly or indirectly as a result of the improper installation or use of its products in vehicle or any other application. In order to safely install and use Gamber-Johnson products full consideration of vehicle occupants, vehicle systems (i.e., the location of fuel lines, brakes lines, electrical, drive train or other systems), air-bags and other safety equipment is required. Gamber-Johnson specifically disclaims any responsibility for the improper use or installation of its products not consistent with the original vehicle manufactures specifications and recommendations, Gamber-Johnson product instruction sheets, or workmanship standards as endorsed through the Gamber-Johnson Certified Installer Program.

© copyright 2026 Gamber-Johnson, LLC

If you need assistance or have questions, call Gamber-Johnson at 1-800-456-6868

Rear Support Assembly

Two Rear Support Clips must be assembled at the time of installation.
Attach each Support Bracket to Tee Nut located in channel on back edge of Notepad™V using a #8-32 x .38 Socket Head Screw.
Attach the Rear Clip to the Support Bracket with a #8 external tooth washer and a #8-32 x .31 Nylon Patch Socket Head Screw.

If your computer has a depth of 8.5" to 9.0" use the supplied Support Clip Riser to allow the cradle to adjust to 8.5" minimum depth

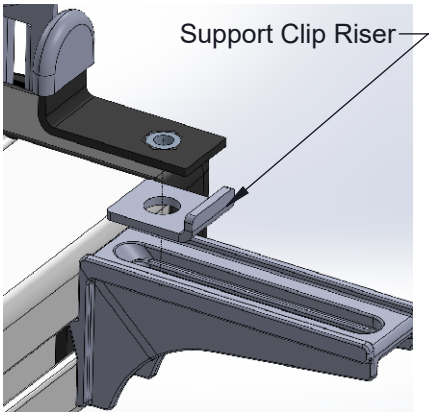

#8-32 x .38 Socket Head Screw

#8 External Tooth Washer &
#8-32 x .31 Nylon Patch Socket Head Screw

Vehicle Mounting

The Notepad™V Universal Cradle is designed to be used with Gamber-Johnson motion attachments, poles and vehicle bases.
The Sliding Mount Bar feature allows side-to-side adjustment of cradle to desired mounting position.
Four .25 Flat Washers and .25-20 x .62 long Hex Head Screws are supplied in the hardware bag to secure motion attachments to the bottom side of the cradle.

.25-20 x .62 Hex Head Screws
& .25 Flat Washers

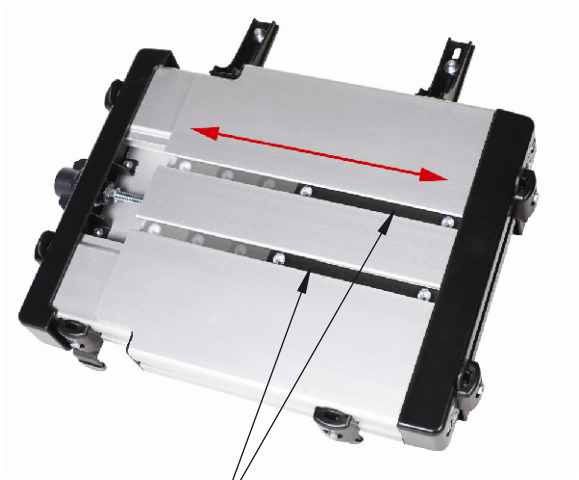

Sliding Mount Bars on bottom surface

Adjusting Notepad™V for computer

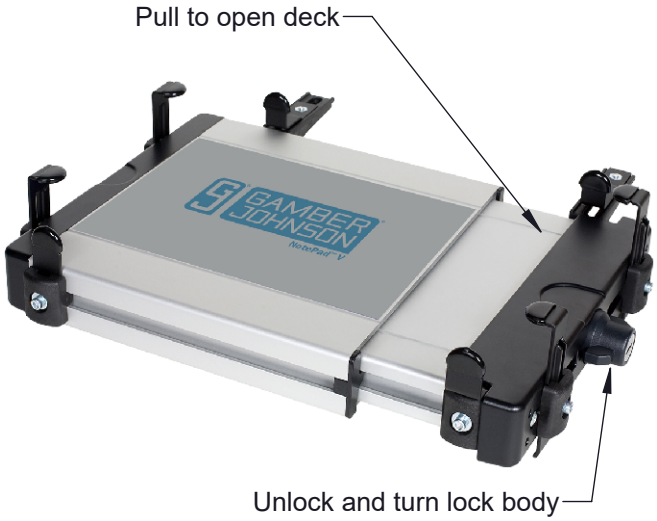

If the latch on Notepad™V is locked, unlock the unit with the supplied keys. All Notepad™V's are keyed alike. Unlatch by turning the lock body clockwise 90 degrees.

Pull the lock side of the Notepad™V to the right to open the deck.

Loosen adjustment screws securing front clips, rear clips and side clips enough to raise them and move them in the slots.

Eight Vinyl Caps are included in hardware bag to place over clips to protect computer if needed. (Zero Edge Side Clips 7160-0250-02, are used without caps)

Place the computer on the Notepad™V deck Slide the computer tight against the Front Clips. The Front Clips can be adjusted side-to-side and. also have a slight amount of vertical adjustment. The Flat and Offset clips may also swap positions, with the offset clip overlapping the fixed deck to accomodate shorter depth computers.

Slide the computer against the Side Clips on the fixed deck. Adjust the Side Clips side-to-side to avoid any needed ports and lower them so the tab will just clear the top of the computer and tighten. A snug fit is preferred.

Push the right side of the Notepad™V in until the right Side Clips touch the computer. Adjust the right Side Clips in the same manner as the left side.

After pushing the unit together, (compressing the computer between the side clips) turn the lock body 90 degrees counter-clockwise to secure the unit.

Adjust the Rear Supports side-to-side and tighten.
Adjust the Rear Clips to prevent the computer from moving back and tighten.

Screen Support Assemblies

The 7160-0251 Screen Support Assembly can only be attached to the right side on Notepad™V.
The 7160-0474 Screen Support Assembly can only be attached to the left side on Notepad™V

Remove the two Phillips Flat Head Screws found. at the back right or left side corners (Depending on which Screen Support Assembly you are using).
Place Screen Support Assembly over the holes and attach using two #8-32 x .62 Socket Head Screws and two #8 Flat Washers.

7160-0253 Mic Clip Assembly

The Mic Clip Assembly can be mounted on any corner of the Notpad™V that does not have another accessory mounted.
Remove the two Phillips Flat Head Screws found on the corner.
Place the Mic Clip Bracket over the holes and attach using two #8-32 x .62 Socket Head Screws and two #8 Flat Washers.
Attach the Mic Clip using two #8-32 x .375 Phillips Flat Head Screws

7160-0252 LED Light Assembly

The LED Light Assembly can be mounted on any corner of the Notepad™ V Cradle. Remove the two Phillips Flat Head Screws found on the corner.
Place the LED Light Assembly over the holes and attach using two #8-32 x .62 Socket Head Screws and two #8 Flat Washers.

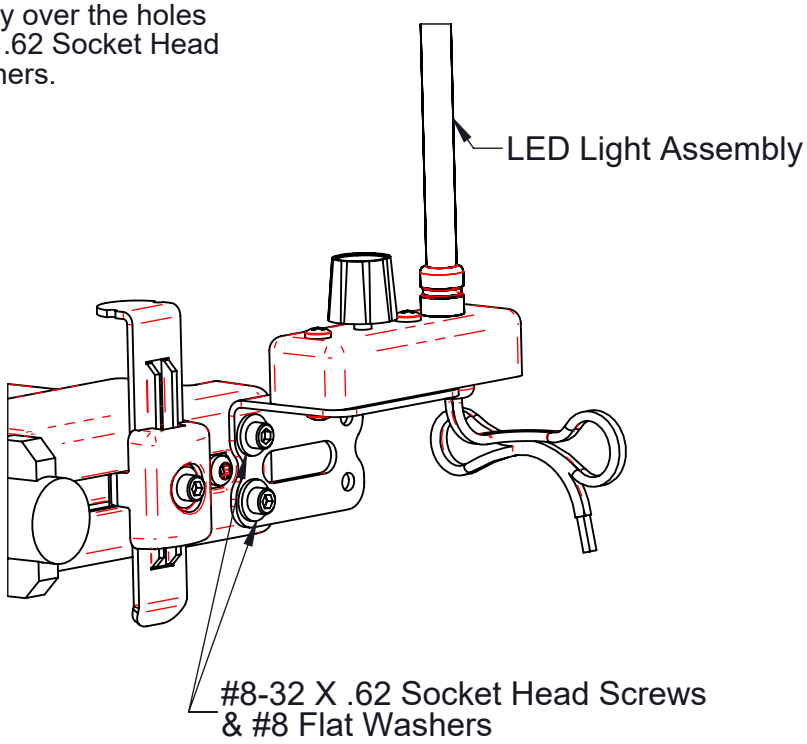

The LED is powered using the red and brown wires on the light base. The LED Assembly is designed to operate on 12 VDC.

In a negative ground vehicle:
Connect the RED wire to the positive pole of the vehicle battery or power distribution box.
It is recommended that the supplied fuse holder and 1 amp fuse be installed on the red wire.
Connect the BROWN wire to a suitable chassis GROUND or the NEGATIVE pole of the battery.

The LED has three light options: Red, White/Red and off.